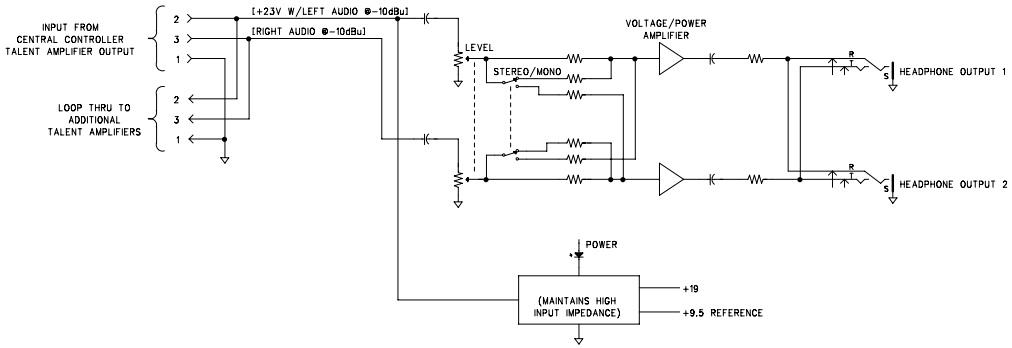

[NOMINAL LEVEL IN dBu]

M35BD_C

STUDIO TECHNOLOGIES, INC.		
MODEL 35 TALENT AMPLIFIER BLOCK DIAGRAM		
DRAWING NO. 30312	DATE 08/12/05	PAGE 01 OF 01